Avanti Operator - Quick Start Guide

By following these simple steps with every installation, you can ensure a trouble free set up - every time!

1) Assemble the operator as shown in the instructions enclosed in the box.

2) **IMPORTANT** – Apply additional tension to the belt by use of the adjustment nut at the end of the boom – as shown below:

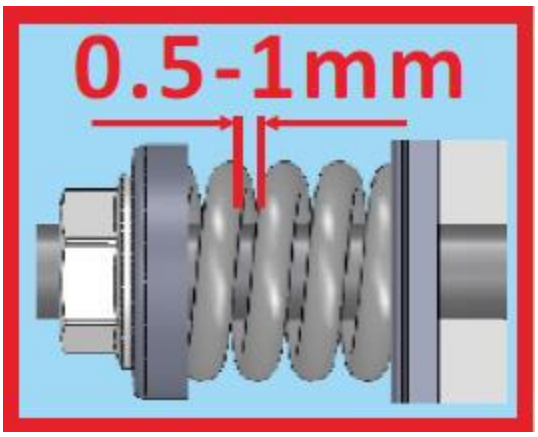

3)**When fitting with an Alutech Trend series sectional door**. Adjust the top roller bracket to approx. 45° as shown in the image below. (PLEASE NOTE IF FITTING AN UP & OVER OR CANOPY DOOR THE OPERATOR HAS A PRE SET FUNCTION MODE. SEE ADDITIONAL FEATURES BELOW)

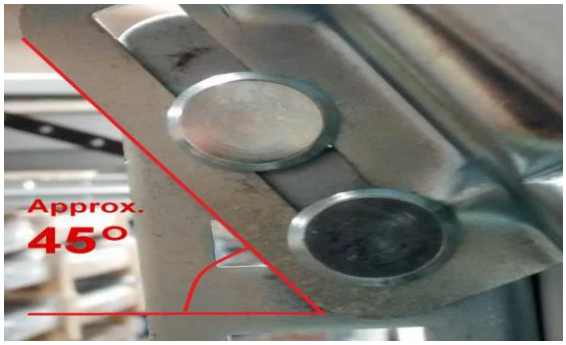

4)Set the open and close limits manually as shown in the instructions

5)**IMPORTANT** Open the door to the half way position. Take hold of the door release cord and **firmly** engage the door into the carriage.

YOU MUST ENSURE THE DOOR IS ENGAGED BEFORE RUNNING THE LEARNING MODE

6)**Power on the operator** – Screen shows "LL" press the 1st button on either of the pre-coded hand transmitters. The door runs a fully automated learning program. **No further adjustment is required on the vast majority of doors.**

7)**On a small minority of doors you may experience some slackness in the belt. If so, follow the steps below:**

- Loosen the manual close limit stop on the boom
- Press and hold the red learn button until "CL" shows on the display
- Use the Blue and Yellow "+" & "-" buttons to adjust the close position
- Press the green confirm button once
- Re-tighten the manual limit stop

SET UP IS NOW COMPLETE – SEE BELOW FOR ADDITIONAL SET UP FEATURES

TO CODE MULTIPLE DOORS WITH MULTIPLE HANDSETS

1)**Delete the code on all handsets** –

- Press the red learn button once until **BU** appears on the display
- Press and hold the green confirm button for approximately 5 seconds or until the courtesy light flashes.
- All pre-coded handsets for this operator are now deleted

2)**To code new handset in-**

- Press the red learn button once on operator number 1 until **BU** shows in the display
- Press "+" or "-" until **RU** shows in the display.
- Press the desired function button on the TX the courtesy light will flash rapidly, handset is now coded.
- Repeat on all other handsets coding the same button. Then repeat this series for door number 2 using an alternative button to operate this door (and so on for door 3 or 4 if applicable)

3)**To re-install the light function**-

- Press the red learn button once (**BU** will show in the display) "+" or "-" until **LI** shows in the display
- Press the desired function button to operate the courtesy light.
- Repeat for each handset & on each operator.

"TIP UP" SETTING FOR UP & OVERS AND CANOPY DOORS

1)Press and hold the blue and yellow "+" & "-" buttons simultaneously
2)Use the blue and yellow "+" & "-" buttons to scroll through the function menu
3)Select "SP" by pressing the green confirm button
4)Use the blue and yellow "+" & "-" buttons to scroll to "TU"
5)Press the green confirm button
6)Press the red learn button to exit the function menu

CODING A WIRELESS DIGITAL KEYPAD

1) Press the red learn button until BU Appears.
2) Press < arrow key and 11.
3) Press and hold the 0 key then press < key at same time, release when light flashes.
4) Type in original or current code (i.e. 11) then < key
5) Type in the new combination (up to 8 digits) then < key
6) Type in new combination again and press < key
7) Wait a moment then key in new combination followed by < key. This code should be set.
8) If a second channel needs coding, repeat above stages using the > arrow key and code 22.