GLIDEROL garage doors

Roll.in.One

Automatic Roller Door Opener

Installation Instructions and **Roll.in.One** Owner's Manual

This manual contains IMPORTANT SAFETY information
DO NOT PROCEED WITH THE INSTALLATION BEFORE READING THOROUGHLY

Roll.in.One Automatic Roller Door Operator

IMPORTANT SAFETY INFORMATION - PLEASE READ CAREFULLY

SAFETY INSTRUCTIONS

WARNING!: To reduce the risk of severe injury or death

- Never let children operate or play with the doors controls
- Keep the remote control away from children
- Always keep the moving door in sight and away from people and objects until it is completely closed.

  NO ONE SHOULD CROSS A MOVING DOOR.
- Do not disengage the door opener to manual operation with children / persons or any other object including motor vehicles within the doorway.
- The Garage door must be well balanced. Sticking or binding doors can falsely trigger the obstruction sensing of the Roll.in.One Unit.
- **All maintenance should be carried out by suitably qualified personnel.**
- Test the door opener monthly. The garage door MUST reverse on contact with a 40mm high rigid object on the floor. The amount of force the door should encounter is adjustable. Failure to adjust the opener properly may cause severe injury or death.
- The Roll.in.One Operator has an electronic obstruction system that provides **safe** and reliable operation. It is however a legal requirement in some countries to also install a Photo-electric sensor across the door way, please check this requirement with your local distributor.

Roll.in.One Drive Assembly (Exploded View)

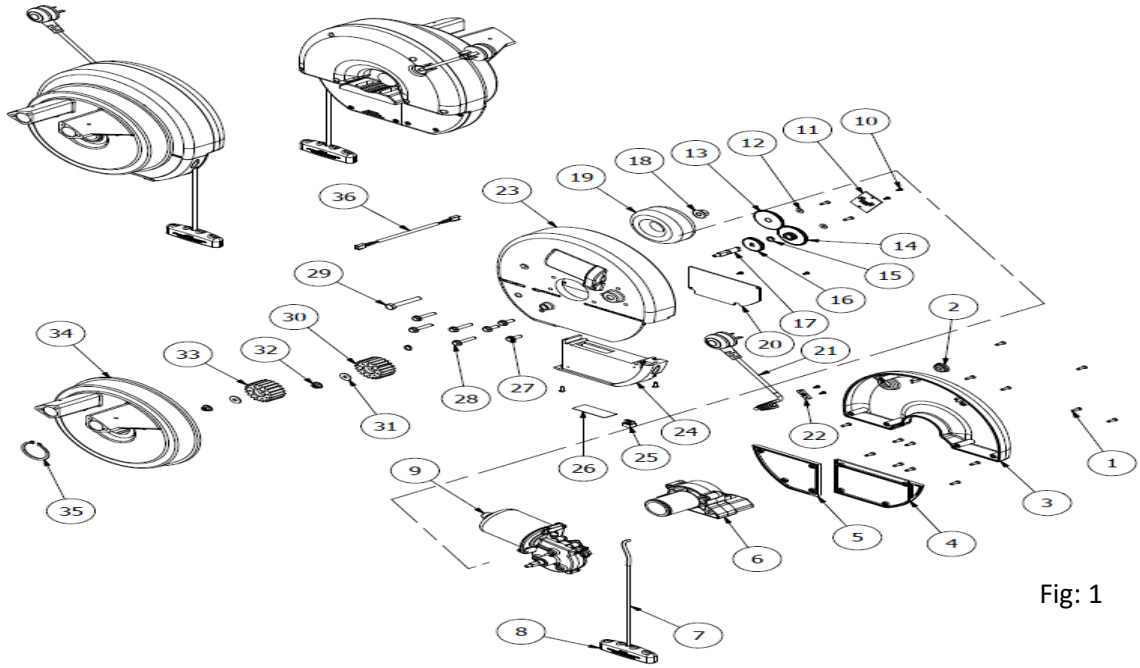

Fig: 1

No.	Part Description	No.	Part Description	No.	Part Description
1	Screw	13	63T Gear	25	Connector
2	Retainer	14	64T Gear	26	Decal
3	Motor Cover	15	C-Ring	27	Bolt
4	Cover_PCB	16	42T Gear	28	Bolt
5	Cover_Limit	17	Shaft	29	Bolt
6	Mounting Bracket	18	Nut	30	21T Gear
7	Release Rope	19	Transformer	31	Washer
8	Release Handle	20	PCB	32	Nut
9	Roller Motor	21	Power Cable	33	21T Gear
10	Screw	22	Wire Mount	34	Drive Wheel
11	PCB Limit	23	Chassis	35	C-Ring
12	Washer	24	PCB Housing	36	Cable

Installation Instructions

The **Roll.in.One** unit may be retrofitted to any roller doors including non Gliderol doors and also it does not require any disassembly of the door during installation.

The **Roll.in.One** unit may be retrofitted to either side of a roller door. Selection of the desired side may be determined by the available room, location of power and general installation.

In some circumstances the wall bracket may need to be relocated if the distance between the side edge of the bracket and face of the drum wheel is greater than 130mm or less than 70mm (110mm for Gliderol doors drumwheel recessed at 75mm from edge of curtain).

Furthermore the face of the drum wheel should not be recessed more than 75mm from the edge of the curtain.

The door must be in good working conditions, adjustments to spring tension may be required.

These instructions are to be read in conjunction with Roller Door Installation instructions.

Please note:-

THE FOLLOWING INSTRUCTIONS FOR FIXING OF THE DRIVE UNIT ASSEMBLY TO THE DOOR ARE FOR A RIGHT HAND INSTALLATION. *(Refer to Fig 2-7).*

a) Check the door U-bolt is securely tightened on the LEFT hand side of the door.

b) Raise the door and tie a rope around the centre to secure the roll.

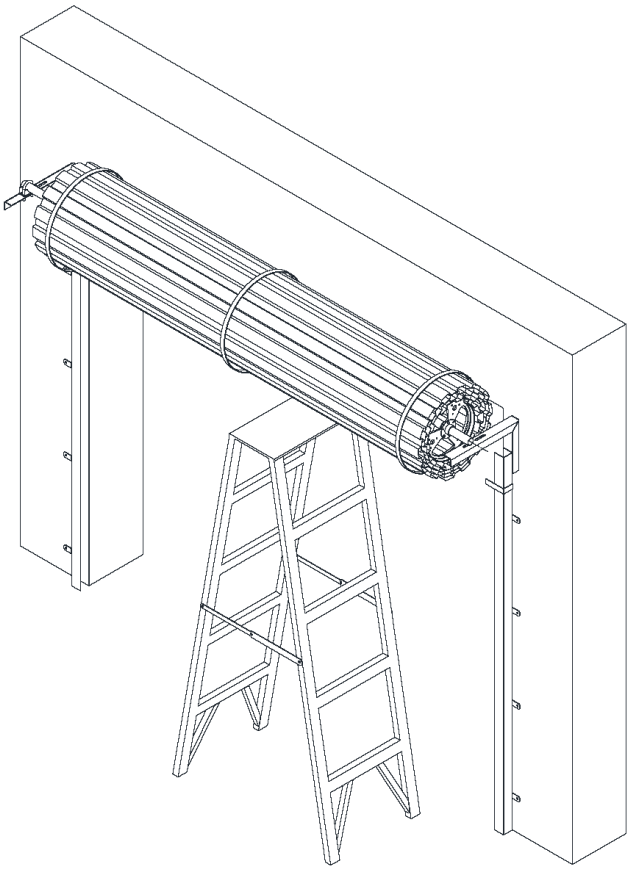

Fig: 2

c) Support the right hand end of the door with a suitable prop, e.g. step ladder and soft padding to protect the door surface *(Fig. 2)*

STOP WARNING: DO NOT ALLOW CHILDREN/PEOPLE AROUND THE DOOR WHEN PROPPED. SERIOUS PERSONAL INJURY AND/OR PROPERTY DAMAGE CAN RESULT FROM FAILURE TO FOLLOW THIS WARNING.

d) Carefully loosen and remove the right hand spindle ‘U’ bolt

e) Make sure the door supporting prop is secure. While the door is supported remove the right hand wall mount bracket.*(Fig. 3)*

f) Slide the Roll.in.One unit on to the spindle of the door.

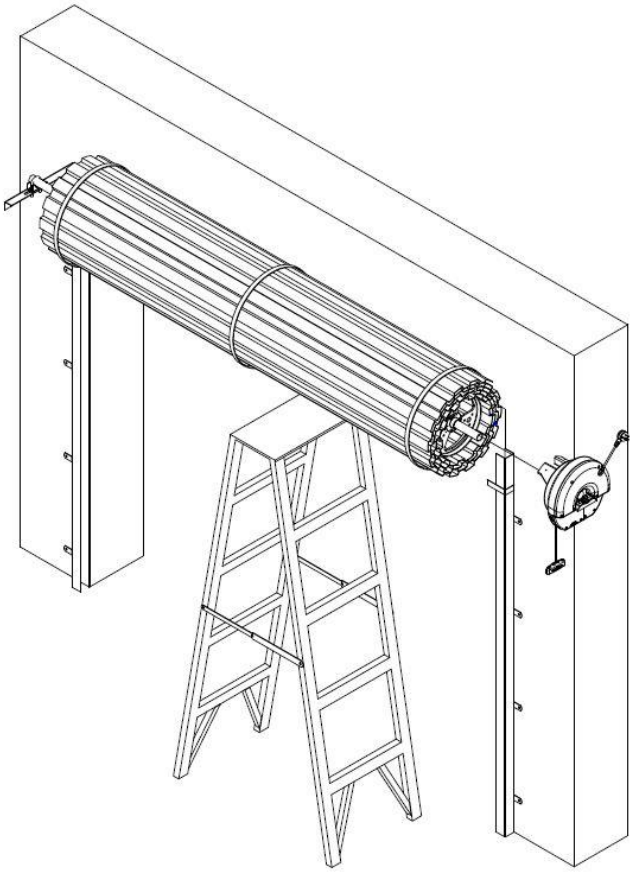

Fig: 3

g) Locate the engaging fork on the drive unit with drum wheel spoke. Please ensure the unit forks are fully engaged into the spoke of the drum wheel.

h) Replace right hand side wall mount bracket *(Fig 4)*

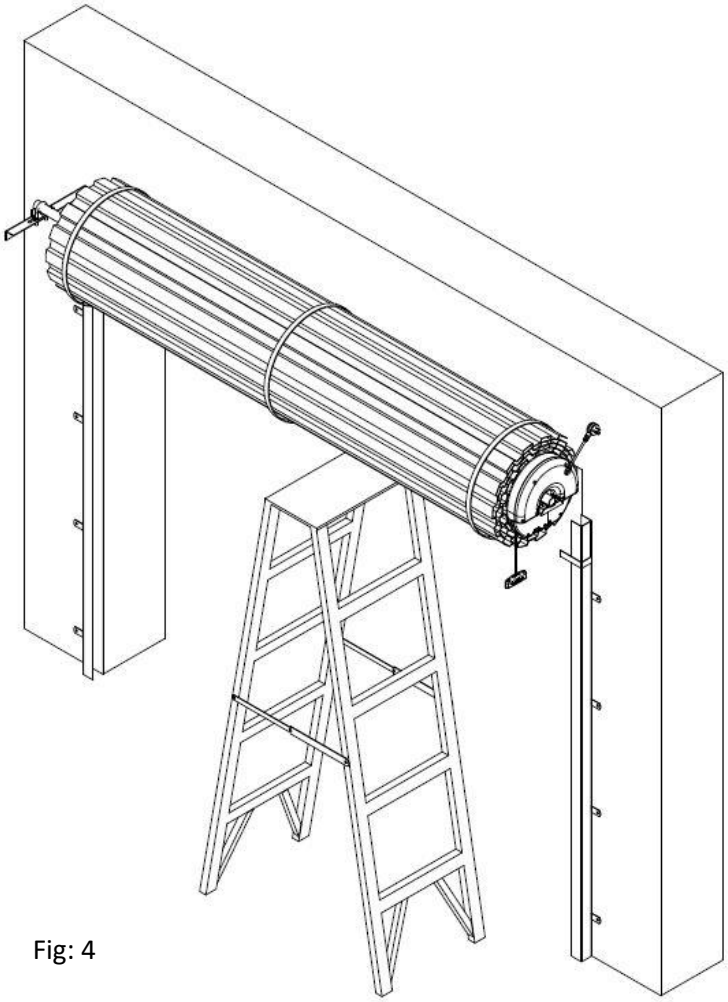

Fig: 4

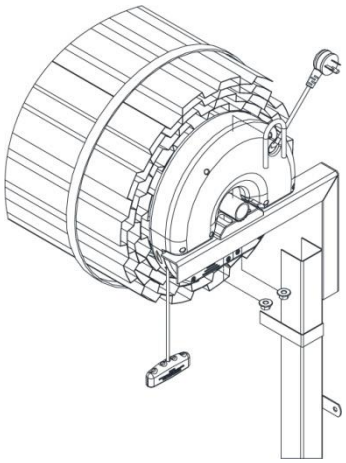

Fig: 5

i) Carefully remove the support from the door and rest spindle on the wall mount bracket

j) Locate the Drive unit on the bracket and fit ‘U’ bolt provided in the fitting kit. Tighten the ‘U’ bolt with two nuts provided (Fig 5).

k) Fit Anti coning collar to the opposite end of the door to avoid sideways movement of the drum wheel.

Alternate Method: On smaller size doors the Roll.in.One unit may be installed without removing and replacing the bracket. After step (d) carefully lift the roller door from the bracket enabling Roll.in.One unit to slide on to the spindle of the door. Ensuring the unit’s fork is properly engaged with the spoke of drum wheel carefully rest the door on the spindle and follow consecutive steps from (j).

l) Locate the weight bar on the centre of the bottom rail and drill two locating holes through the holes on the weight bar into the bottom rail. Secure the weight bar with two bolts provided. *(Fig 6)*

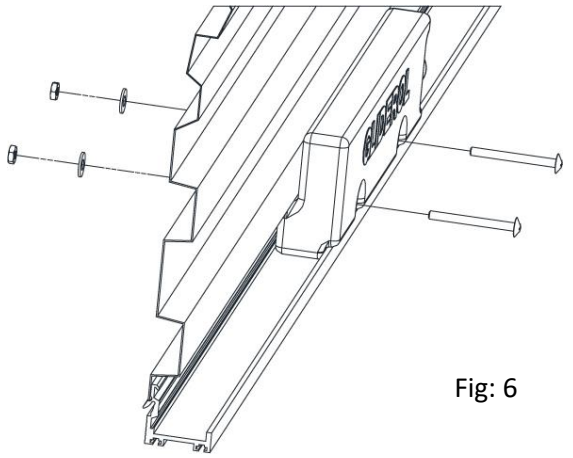

Fig: 6

Security Screw: Fully close the door, mark the corrugation just before the curtain leaves the top roll, drill through the curtain and the drum wheel rim and apply a 'pop rivet' or self-tapping screw. This must be done at both ends of the door (Fig. 7)

NOTE: After marking the flute the curtain may be raised to give access to drilling etc.

WARNING: Care must be exercised when drilling to avoid internal wiring.

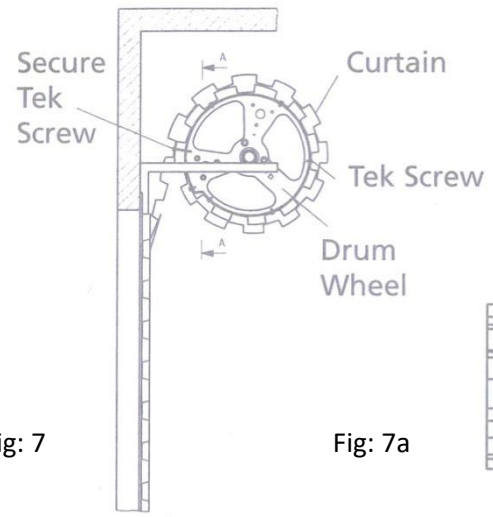

Fig: 7

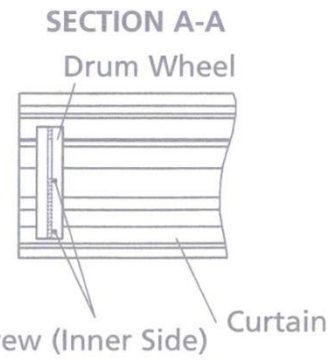

Fig: 7a

IMPORTANT: Security rivet / tek screw must always be applied to inner side of drum wheel as shown in *Fig: 7a*. Failure to do so may result in internal damage to the Roll.in.One drive unit.

PCB Index

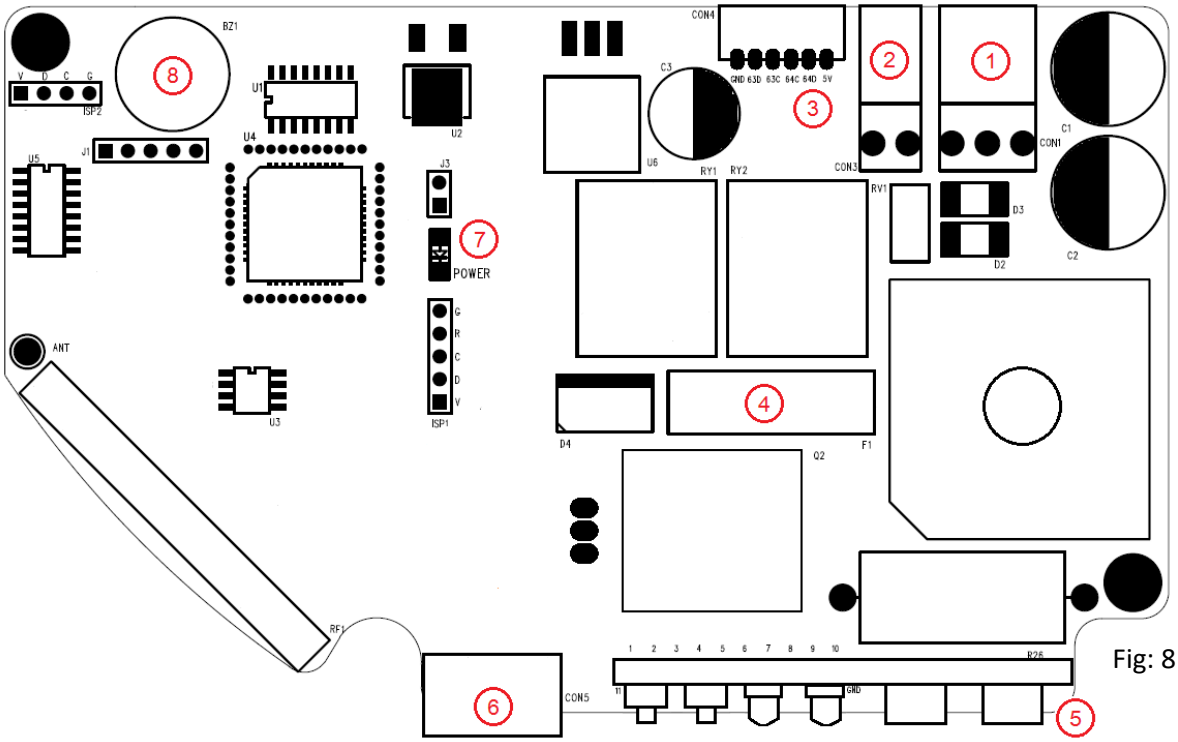

Fig: 8

1	Transformer Input Connector	5	Function Setting Panel
2	Motor Cable Connector	6	Photo Sensor Switch Connector
3	Limit Connector	7	Power LED Indication
4	Fuse	8	Buzzer

User Interface

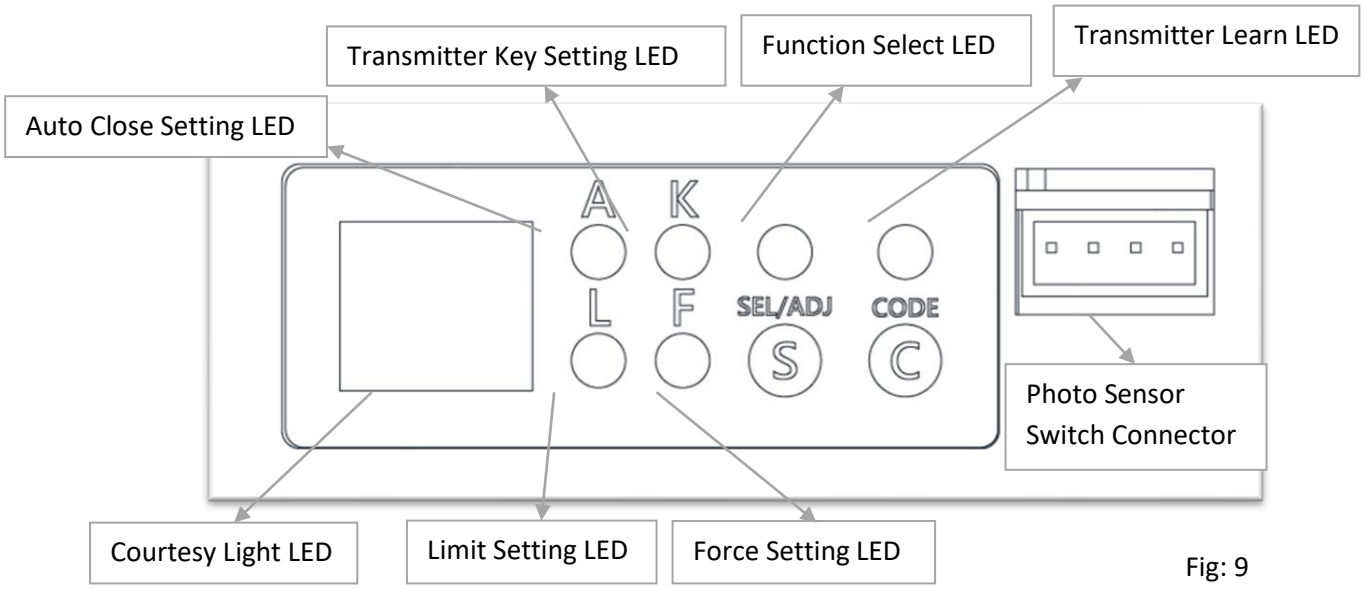

Fig: 9

Operating Panel

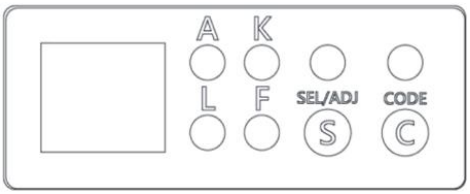

1. [C] button - coding button
2. [S] button
   Press and hold **< 0.5 second** - single button operation (when limit is already set)
   Press and hold **> 0.5 second** and **<1.5 seconds** - no action
   Press and hold **> 1.5 seconds** - enter functional setting

1.0 Transmitter Coding – By Controller

3. Press[C] button once
4. [CODE] will light with 3 beeps
5. Press the desired operation key on transmitter
6. LED will diminish to signal successful programming

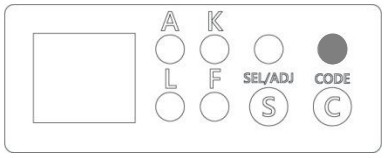

Fig: 10

1.1 Transmitter Coding – By Transmitter

1. Using an already programmed transmitter, press and hold OPEN & STOP keys simultaneously for 2 seconds
2. Unit will beep three times to signal for Learn Mode
3. Press the desired operation key on the new transmitter
4. A beep will signal for successful coding. Two beeps signal for a transmitter already in memory
5. Unit will automatically exit the setup after 3 seconds

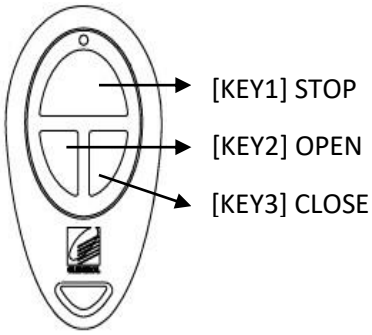

Fig: 11

2.0 Transmitter Key Setting

1. Press and hold [S], release finger while the red light turns from [F] to [K]

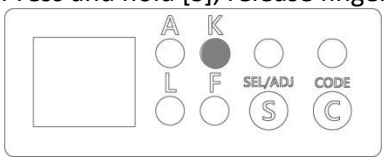

2. Press [S] again, when the light of [SEL/ADJ] turns RED or GREEN:

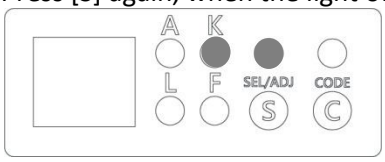

RED indicates 3 button operation
GREEN indicates single button operation

3. 2 beeps will signal for successful coding and a transmitter already in memory
4. Unit will automatically exit the setup

Single Button Configuration: Any one of the three buttons in the transmitter can be used to control all three functions Stop/Open/Close. Useful when one transmitter can operate more than one door and a maximum of three doors.

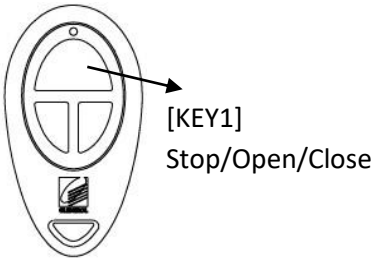

Three Button Configuration: Each buttons in the transmitter can be used to control individual functions like functions Stop/Open/Close of the same door.

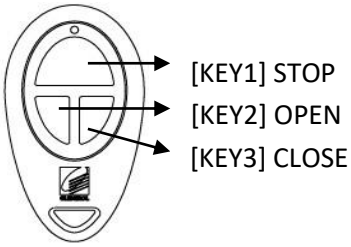

3.0 <u>Transmitter Code Erase</u>

1. Press and hold [C] for 8 seconds, [CODE] will light
2. While LED diminishes, ALL codes have been erased

4.0 <u>Limit Setting – By Controller</u>

1. Press and hold [S] button, release finger while the red light turns from [F] to [L]

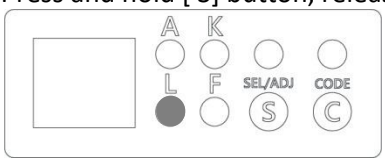

2. Press [S] again, when the light of [SEL/ADJ] turns RED or GREEN, select the desire drive handing

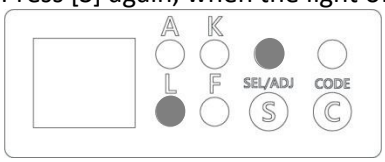

RED indicates Left Hand Drive
GREEN indicates Right Hand Drive

3. Release finger after selecting the right mode with 3 beeps after 4~5 seconds, and then light of [SEL/ADJ] turns green and starts blinking
4. Proceed to setup the TOP limit, by pressing [OPEN] button on transmitter, and confirm TOP limit position by pressing [STOP] button. 2 beeps will signal for successful programming.
   While setting the TOP limit the [SEL/ADJ] light will turn **green and starts blink.

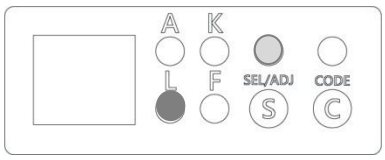

5. Then set the BOTTOM limit, by pressing [CLOSE] button, and confirm BOTTOM limit position by pressing [STOP] button. 2 beeps will signal for successful programming.
   While setting the TOP limit the [SEL/ADJ] light will turn **red and starts blink.

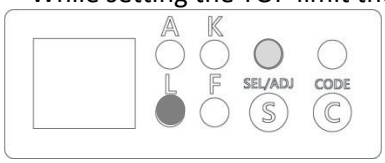

6. Once limits are set, the door will automatically perform a full calibration cycle.

5.0 <u>Force Setting</u>

1. Press and hold [S], release finger when [F] lights in red

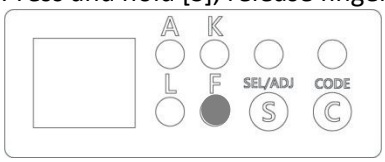

2. Press [S] again, when the light of [SEL/ADJ] turns RED, ORANGE, or GREEN:

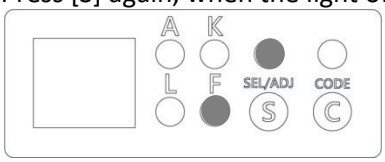

   GREEN indicates the lightest force
   ORANGE indicates the medium force
   RED indicates the heaviest force
3. 2 beeps will signal for successful setting and the unit will automatically exit the setup.

6.0 <u>Automatic Closing Setting</u>

1. Press and hold [S], and release finger when the red light turns from [F] to [A]

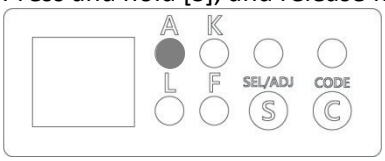

2. Press [S] again, when the light of [SEL/ADJ] turns RED, ORANGE, GREEN or OFF.

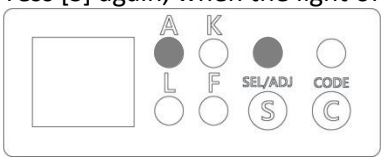

   GREEN indicates auto closing time at 10 seconds
   ORANGE indicates auto closing time at 20 seconds
   RED indicates auto closing time at 30 seconds
   Light **OFF** indicates there is no auto closing function.
3. 2 beeps will signal for successful setting and the unit will automatically exit the setup.

Please note the Auto-close time delay will only start once the door is fully opened.
If for some reason the door has to be left opened for longer period, press the stop button before the door reaches the fully open position by this the Auto close function will not be activated.

7.0 LED Control

Under 3 Keys transmitter mode, the LED can be switched on and off using the STOP key.

8.0 Vacation Mode

Transmitter signal can be locked out by pressing STOP & CLOSE keys simultaneously and holding it for 3 seconds on the transmitter. To deactivate, press the same keys again and hold it for 3 seconds.

9.0 Key Ring Transmitter

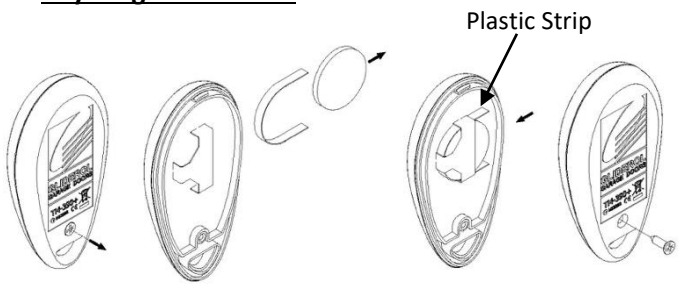

Battery Type 3V CR2016x2 (Lithium Cell)

To replace batteries:

1. Remove the screw on the back case.
2. Replace the old batteries with new ones (3V CR2016x2) and ensure plastic strip remain intact in clip.
3. Locate back of case and secure with screw.

10.0 Photo Sensor Connection Diagram

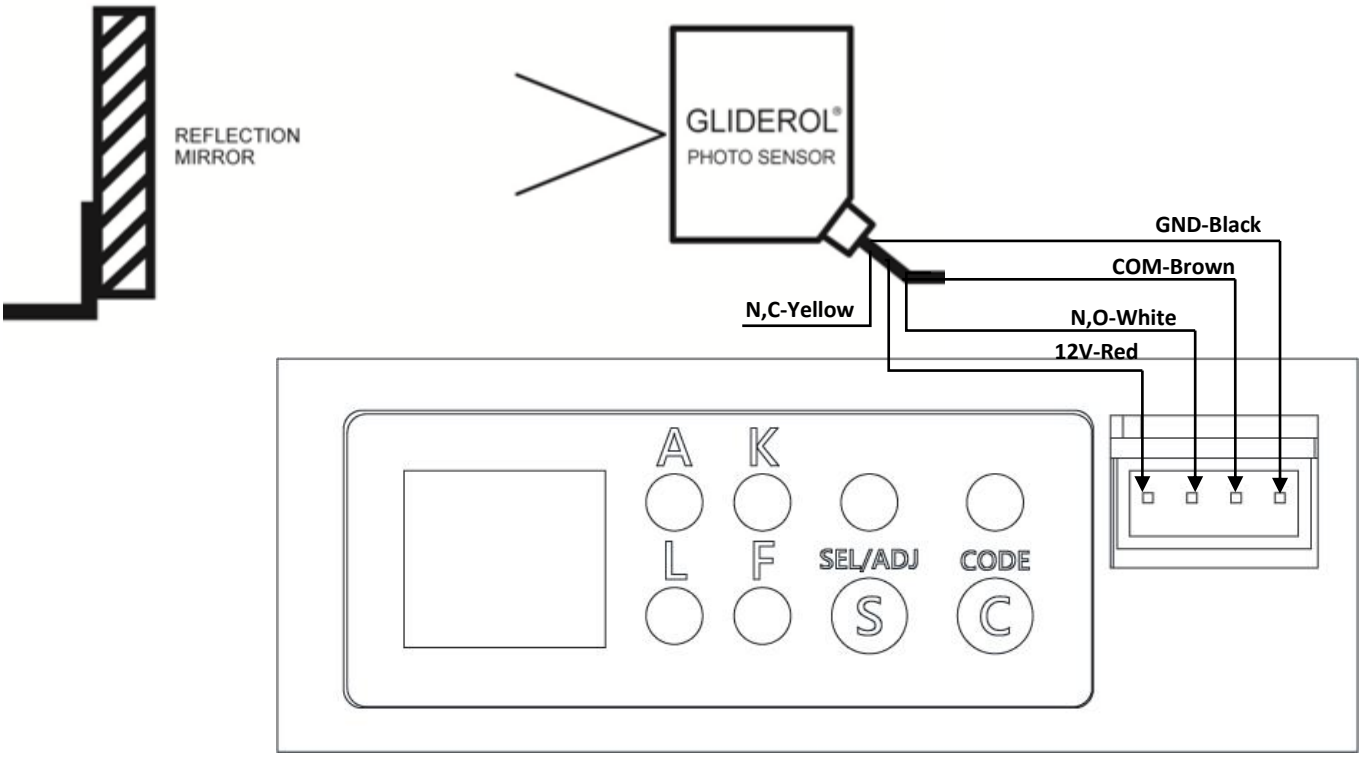

Owner's Manual for the
Roll.in.One Automatic Roller Door Operator

CONGRATULATIONS! On the purchase of your Roll.in.One Automatic Roller Door Opener

INDEX

	Page		Page
Door Operation	13	Key Ring Handset	13
Manual Operation	13	Wireless Wall Button Switch	13
Obstruction Detection	13	Photo Electric Sensor	13
Vacation Mode	13	Trouble shooting table	14
Automatic Closing	13	Technical Specifications	15
Courtesy Light	13	Warranty	16-17
Audible Buzzer	13	Warranty Form	18
Rolling Code Security	13	Sales & Service	18

Door Operation

A roller door equipped with a Roll.in.One opener may be operated by using the handheld Transmitter.

Momentary activation of the above method will activate the door to open or close.

! WARNING - Ensure that the Centre Lift Lock is not engaged when the Drive Unit is in the automatic position.

Manual Operation

In the case of a power failure the Roll.in.One opener has an easily accessible manual release chord. Pulling the manual release chord once will set the door for manual operation and pulling it again will set the door for electric operation.

Obstruction Detection

During an open cycle if an obstruction is detected, the door will stop. During a closing cycle if an obstruction is detected, the door will reverse to the open position. The sensitivity or the amount force required to cause obstruction detection is fully adjustable (refer to 5.0 Force setting on page-10) for force adjustment.

Vacation Mode

When the door is not used for a long time or during vacation it can be set to vacation mode for security purposes. To activate & deactivate vacation mode refer to 8.0 on page-10.

Automatic Closing

The Roll.in.One opener can be programmed to automatically close from 10 to 30 seconds after the door has been opened (refer to 6.0 on page-10) to activate and deactivate Auto- Close function.

Courtesy Light

An internal courtesy LED light is housed within the control box enclosure. This is activated during an open or close cycle and will stay illuminated for approximately 60 seconds.

Audible Buzzer

The Roll.in.One has an internal Piezo Siren that will beep momentarily each time the door is activated by factory default it will be enabled.

This function can be disabled if required to disable remove jumper 'j9' next to buzzer 'Bz1' refer to PCB index diagram on page-7.

Rolling Code Security

The transmitter and receiver incorporate the latest state of the art encryption technology.

This allows the coded transmission to change after each operation with literally billions of unique combinations.

Each Roll.in.One opener has the facility to store up to 15 individual handsets.

Key Ring Handset

The hand transmitter is manufactured using the latest surface mount technology and incorporates 3 functional buttons. This enables the user to remotely control up to 3 separate operators from the one handset or configure each button to operate OPEN / CLOSE / STOP functions.

Wireless wall Button Switch

A wireless wall button, single or three buttons can be mounted on the wall to operate the door.

Photo-electric sensor

The Roll.in.One roller door opener includes an interface for the connection of a photo-beam sensor. When fitted, during door closing if the photo sensor has been triggered the door will auto reverse with continuous beep sound. The Photo-beam sensor can be supplied as an accessory option. *(Refer to 10.0 on page 12 for wiring diagram)*

! WARNING - In some countries it is a legal requirement to fit Photo-cell sensors. Please check with your local distributor

Trouble Shooting

Before you call your local Gliderol agent please check the following Fault Table

SYMPTOM	ACTION
1. Door does not operate.	⇒ Check electrical supply to unit. ⇒ Press handset and/or bell press button again.
2. Drive motor operates but door does not move.	⇒ Manual release may be engaged, pull the manual release chord once to put the drive unit back to electric operation
3. Door auto-reverses after closing fully.	⇒ The door should not stop by striking the ground; reset the door travel limits by limit learning *(page 10).*
4. Door stalls at fully open position and continues to try to open the door if button is pressed again.	⇒ The door has lost its limits, it should not stop by striking the top guide stop; reset the door travel limits by limit learning *(page 10).*
5. Door open and closed positions incorrect (Stop short)	⇒ The door has lost its limits (top limit and bottom limit). Reset the door travel limits by limit learning *(page 10).*
6. Courtesy light comes on but door does not move	⇒ Manual release may be engaged, pull the manual release chord once to put the drive unit back to electric operation
7. Handset range diminishes.	⇒ Replace handset battery after 12 months. ⇒ Check position of antenna on unit to ensure it is relatively straight and not adjacent to the power cord.
8. Handset does not open the door.	⇒ Replace handset battery after 6-12 months. ⇒ Check position of antenna on unit to ensure it is relatively straight and not adjacent to the power cord. ⇒ Check that the handset has been programmed to the door *(page 8)*
9. Door auto-reverses before it is closed.	⇒ Check the force sensitivity setting and readjust *(page 11).* Check the door is not jammed in tracks.
10. Door stops during opening.	⇒ Check the force sensitivity setting and readjust *(page 11).* Check the door is not jammed in tracks.
11. Door does not operate and the courtesy lamp is not on.	⇒ Check power is switched on. ⇒ Check the fuse on circuit board and replace. ⇒ Check the door is not jammed in tracks.

Technical Specifications

CHARACTERISTICS	SYMBOL	MIN.	TYP.	MAX.	UNIT
Input Voltage		218	240	262	VAC
System Power Dissipation			100		W
Transformer Power			100		VA
Standby Power Consumption			3.5		W
Transformer Output Voltage	TR	21.6	24	26.4	VAC
Work Voltage of Motor	MOTOR	18	24	34	VDC
Noise of Motor	MOTOR			55	dBA
Lamp Power	LED7~LED10			0.24	W
Buzzer Voltage	BZ1		12		VDC
Fuse	FUSE		15		A
Carrier Frequency Range	Handset	389.9	390	390.1	MHz
Modulation	Handset		AM		
Deviation	Handset	100		100	KHz
RF Output Power	Handset			8	uW
Transmitter Battery	Handset		6		VDC
Demodulation Mode	RF1		AM		
Receiver Sensitivity	RF1	-90		-100	dB
Data Rate	RF1		1K		Hz
Operation Temperature		-20	25	85	℃
Output Voltage in circuit board terminal (0.5 amps Max)			12		V

Warranty Form

Name ..... Address .....

.....

Product Type ..... Installation Date .....

Supplier (Distributor) .....

Installer ..... Phone No .....

Address .....

Installers Signature .....

NOTE: THIS FORM MUST BE COMPLETED BY THE INSTALLER AND PRODUCED AS PROOF OF PURCHASE DATE WHEN MAKING A SERVICE CALL UNDER WARRANTY, OTHERWISE SUCH CALLS ARE LIABLE TO SERVICE CHARGES.

FOR SALES AND SERVICE, CONTACT

Gliderol Garage Doors

Head Office

Gliderol Garage Doors
Kitching Road, North West Industrial Estate,
Peterlee, Co. Durham SR8 2HP

Tel: 0800 834 250
Fax: 0191 518 0548

OR YOUR LOCAL SUPPLIER

GLIDEROL garage doors

CE